METALTRIM

metal transformation

COMPANY PRESENTATION 2025

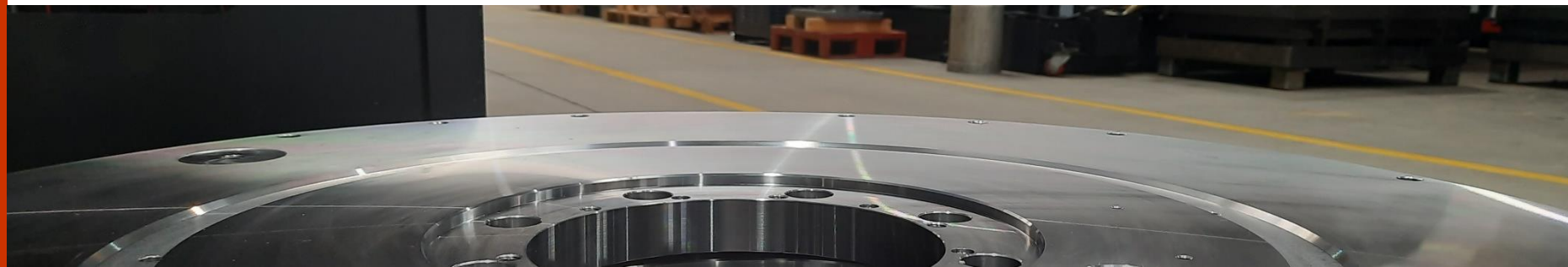

Company in 2025

People

Values – Strategy

Business development

Location

Services

Metaltrim 2028

Questions and answers

Company in 2025

We focus on the production of equipment components for various industrial segments, workpieces, modules and parts by machining technology and other complementary technologies according to customer requirements.

Key figures describing our company

27 years of experience

2 000 m² production floor

€ 5,8 M sales in 2024

600+ sold products in 2024

€ 600k investments in 2024

200+ suppliers

35 (6) customers

45 employees
30-15

20 CNC machines
10 MILL – 10 TURN

METAL Trim

Company in 2025

Company in 2025

People

Values – Strategy

Business development

Location

Services

Metaltrim 2028

Questions and answers

Timeline

1998
Establishment of the company named Metaltrim – Jozef Žofaj, first classic machines in the family company

2002
Introduction of CNC technology

2008
METALTRIM, s.r.o. – change of legal form to Limited Liability Company, increasing of production staff

2010
Investment to quality process improvement
3D CMM machine

2012
Introduction of parts for PERSONAL ELEVATORS focusing on production of safety parts for brake systems

2018
- Railway industry parts introduction
- focusing on environment
- ERP PROFIT introduction

2024
- Investment to turning technology
- CMM renewal
- ESG reporting
- ECOVADIS achieved bronze medal

27 years of experiences with production of components and services for high-end customers.

People

Company in 2025

People

Values – Strategy

Business development

Location

Services

Metaltrim 2028

Questions and answers

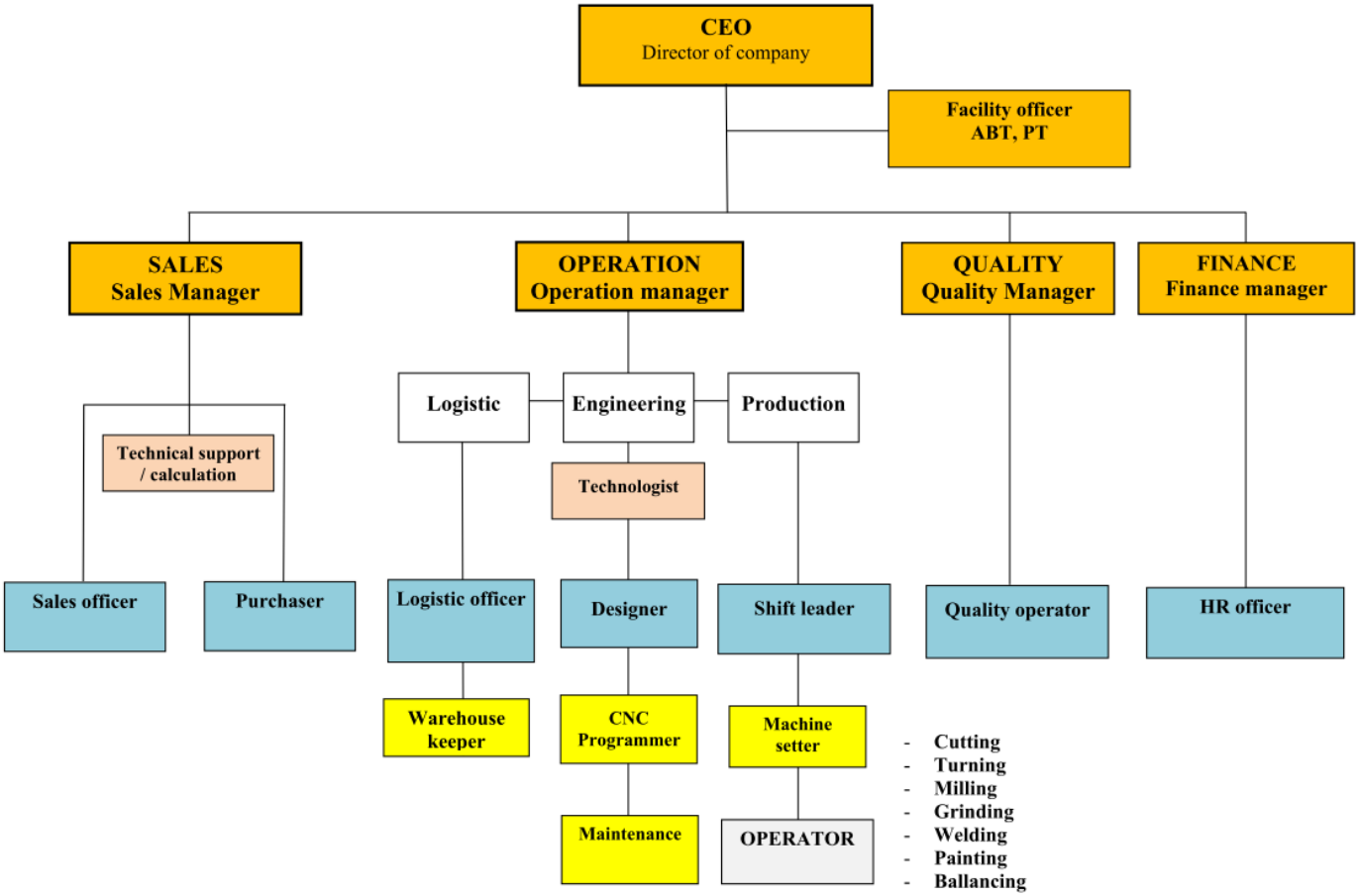

White collar 15

Blue collar 30

Company in 2025

People

Values – Strategy

Business development

Location

Services

Metaltrim 2028

Questions and answers

CORE VALUES

Company core values - clearly stated principles about the organization's vision, mission, and principles.

Customer-centricity

Prioritizing customer needs and satisfaction in all important business operations.

Ethical

Demonstrating integrity and adhering to moral principles in decision-making.

Honesty

Upholding integrity and transparency in all business practices and interactions.

Teamwork

Effective collaboration to achieve common challenging goals within Metaltrim as well as with customers.

Company in 2025

People

Values – Strategy

Business development

Location

Services

Metaltrim 2028

Questions and answers

Metaltrim produces parts for our clients' assemblies and focuses on the following segments

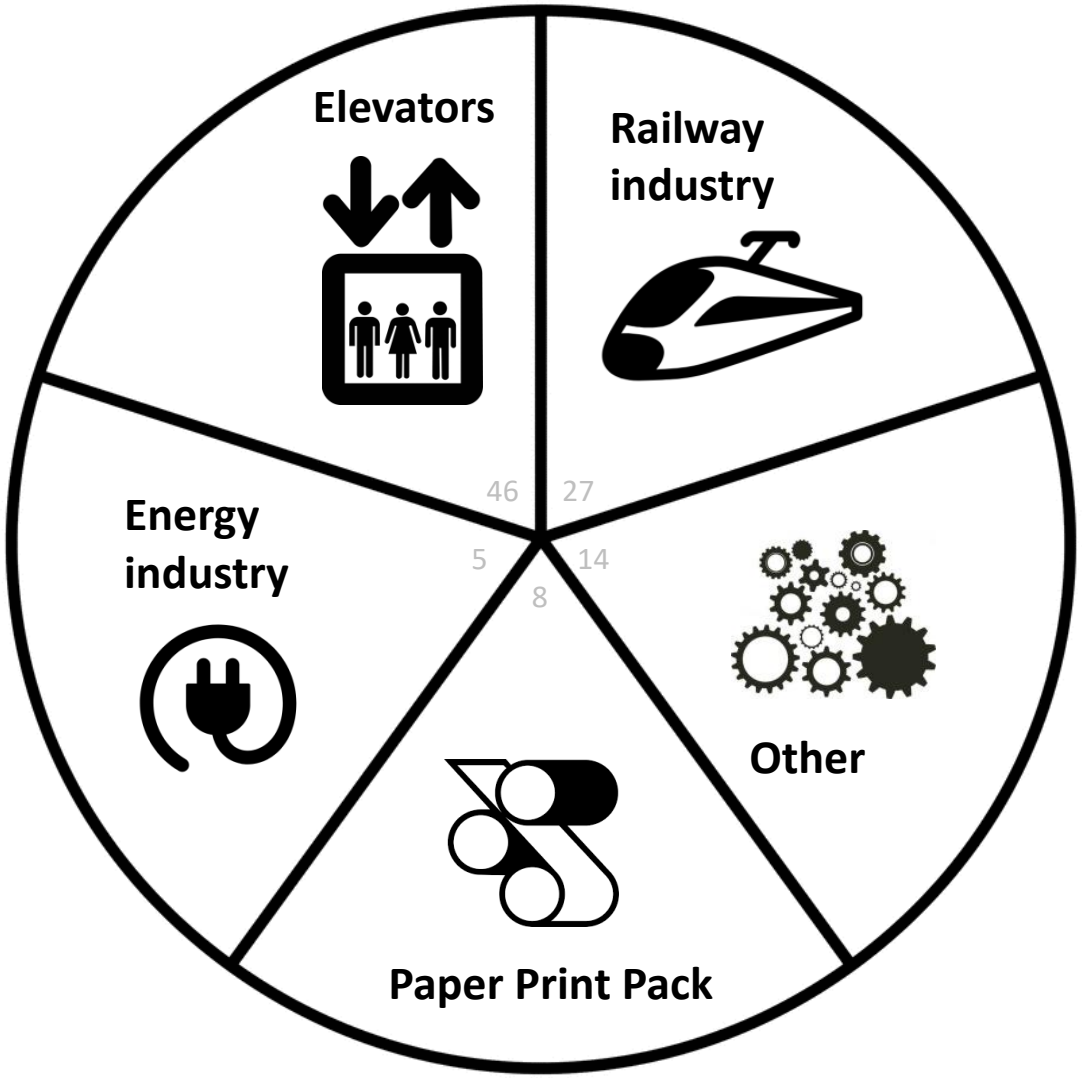

Company in 2025

People

Values – Strategy

Business development

Location

Services

Metaltrim 2028

Questions and answers

Sales history

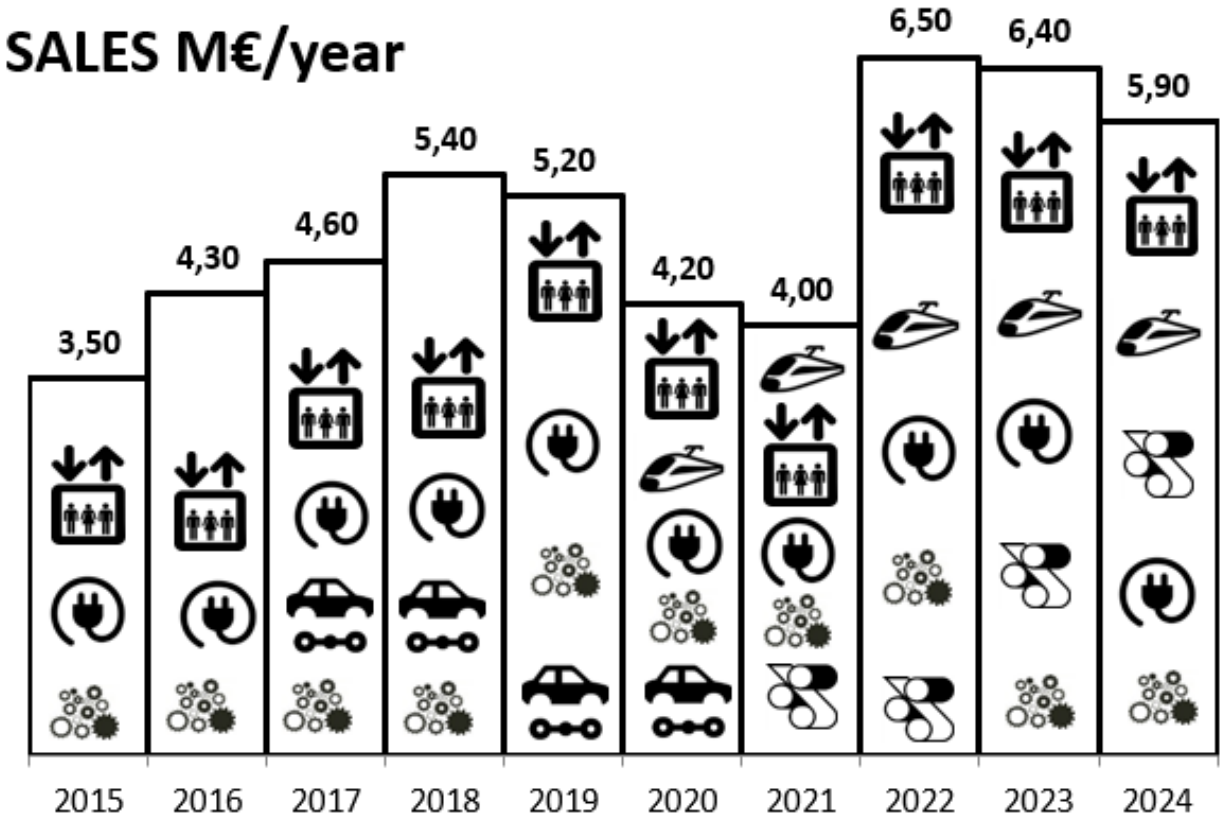

Company in 2025

People

Values – Strategy

Business development

Location

Services

Metaltrim 2028

Questions and answers

Products

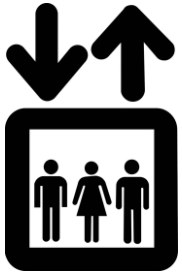

Elevators
- People transport

WITTUR

Rope pulleys

Brake systems

Profiles

METAL Trim

Company in 2025

People

Values – Strategy

Business development

Location

Services

Metaltrim 2028

Questions and answers

Products

Faiveley transport Czech a.s. (Czech republic)
Wabtec Hauts-de-France Amiens, (France)
Faiveley Transport Schwab AG, (Switzerland)
Wabtec Corporation, Poli Srl, (Italy)
Wabtec MZT, (Macedonia)
Wabtec Germany GmbH – Bochum, (Germany)

Parts for brake systems

Company in 2025

People

Values – Strategy

Business development

Location

Services

Metaltrim 2028

Questions and answers

Products

PILLER Power Systems

Power systems
- Energy backup

Wheels

Frames

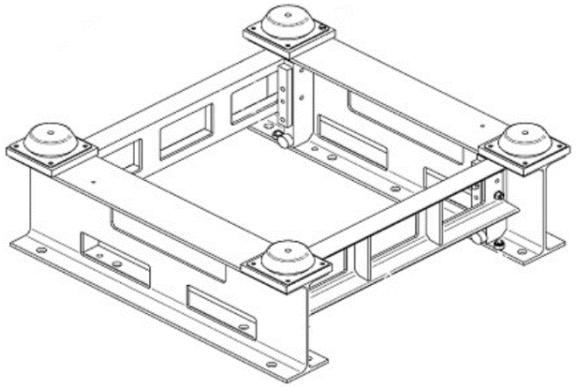

Company in 2025

People

Values – Strategy

Business development

Location

Services

Metaltrim 2028

Questions and answers

Products

BOBST

manroland

Paper Print Pack

Parts for graphic industry
Paper folding machines
Industrial printing machines

METAL Trim

Company in 2025

People

Values – Strategy

Business development

Location

Services

Metaltrim 2028

Questions and answers

Products

Other

- printing machines
- hydraulic aggregates
- parts for injection casting technology
- Turbo chargers housing
- Parts for off highway industry
- Service parts for metalurgical plants

Company in 2025

People

Values – Strategy

Business development

Location

Services

Metaltrim 2028

Questions and answers

Location

120 km Krakow PL
280 km Bratislava

55 km Turany

METALTRIM, Ltd.
Oravská Jasenica 603
029 64 Oravská Jasenica
SLOVAKIA
obchod@metaltrim.sk

+421 911 991 118
+421 43 5324 657

www.metaltrim.sk

METAL Trim

Company in 2025

People

Values – Strategy

Business development

Location

Services

Metaltrim 2028

Questions and answers

Services

Project management - Customer support

- Project planning
- Cost calculation | Evaluation

Engineering - Preparation

- Jig design
- 3D modeling
- Documentation management

Quality

- Incoming|process|outcoming control
- IMS integrated managment system (ISO)

Technology | CAM Programming

- Machining
- Surface treatment
- Assembly

Production

- MRP Planning – SOFTIP PROFIT
- Resource coordination

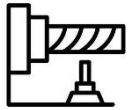

METAL Trim

Company in 2025

People

Values – Strategy

Business development

Location

Services

Metaltrim 2028

Questions and answers

Services

Engineering |3D Design

- Customer support for professional solution

Refit international - Wheel redesign, chocolate mould project

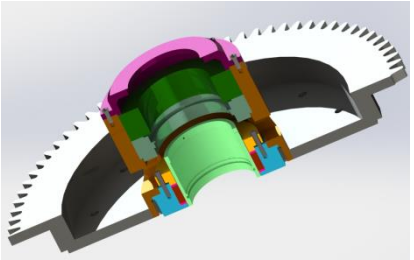

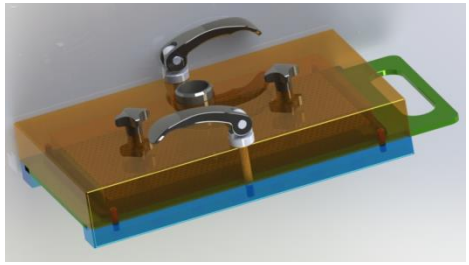

- Support for cost calculation,

Preparation of 3D models for simulation

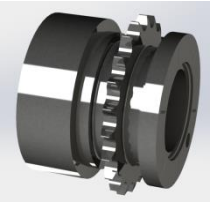

Company in 2025

People

Values – Strategy

Business development

Location

Services

Metaltrim 2028

Questions and answers

Services

Engineering |3D Design

- **Support for production**
  Makino clamping tower, milling 4th axis clamping

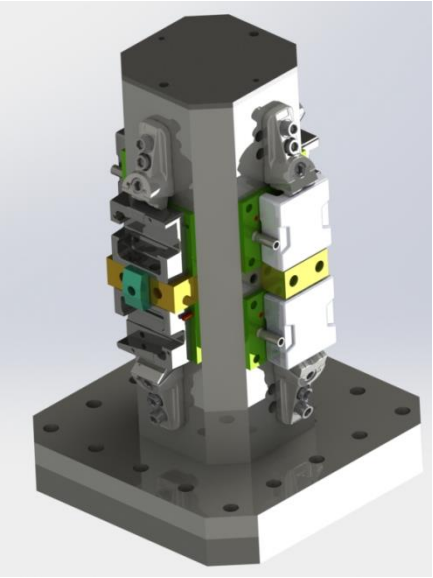

- **Metaltrim own design**
  wood splitter, wood cutter

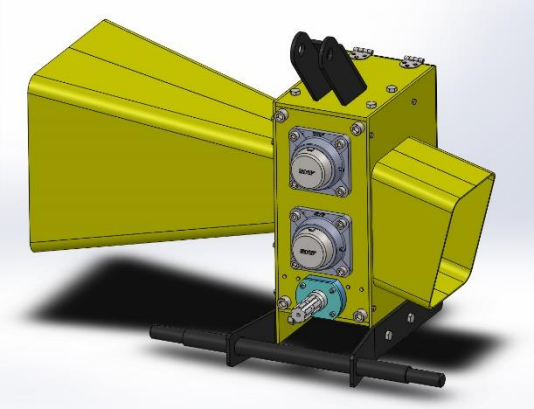

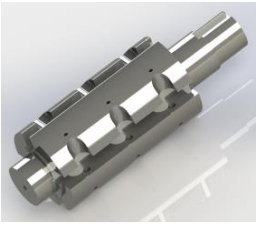

Services

Company in 2025

People

Values – Strategy

Business development

Location

Services

Metaltrim 2028

Questions and answers

Engineering |CAM programming

- Simulation of process time for cost calculation
- CNC programming by use of post-processor

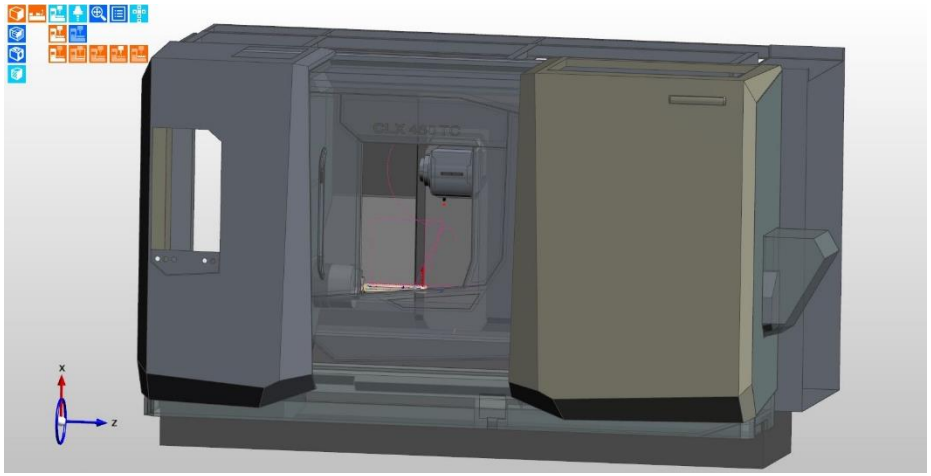

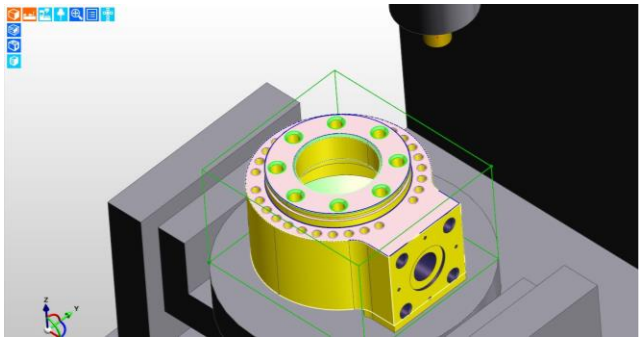

Company in 2025

People

Values – Strategy

Business development

Location

Services

Metaltrim 2028

Questions and answers

Quality and Enviroment

Quality department

- Quality of process is a condition of good products
- ISO integrated since 05.May 2009,
- 29.4.2024 succesfull recertificated with validity to 28. 4. 2027

BUREAU VERITAS Certification

METALTRIM, s.r.o.
603, 029 64 Oravská Jasenica
Slovak republic

Bureau Veritas Certification Holding SAS – UK Branch certifies that the Management System of the above organisation has been audited and found to be in accordance with the requirements of the management system standards detailed below

ISO 9001: 2015

Scope of certification

MECHANICAL PRODUCTION – METAL PRODUCTION, METALWORKING, WELDING, SURFACE TREATMENT OF METALS. MANUFACTURING AND ASSEMBLY OF FIXTURES, EQUIPMENT, INSTRUMENTS AND TOOLS.

Original cycle start date:	**05.05.2009**
Expiry date of previous cycle:	**29.04.2024**
Recertification Audit date:	**26.04.2024**
Recertification cycle start date:	**29.04.2024**

Subject to the continued satisfactory operation of the organization's Management System, this certificate expires on: **28.04.2027**

Certificate No. ***SK-U24 053Q*** *Version:* ***1*** *Issue date:* ***29.04.2024***

Certification body address: 5th Floor, 66 Prescot Street, London E1 8HG, United Kingdom
Local office: Plynárenská 7/B, BRATISLAVA 821 09, Slovak Republic

UKAS MANAGEMENT SYSTEMS 0008

Further clarifications regarding the scope and validity of this certificate and the applicability of the management system requirements, please call: + 421 2 5341 4165

1 / 1

BUREAU VERITAS Certification

METALTRIM, s.r.o.
603, 029 64 Oravská Jasenica
Slovak republic

Bureau Veritas Certification Holding SAS – UK Branch certifies that the Management System of the above organisation has been audited and found to be in accordance with the requirements of the management system standards detailed below

ISO 14001: 2015

Scope of certification

MECHANICAL PRODUCTION – METAL PRODUCTION, METALWORKING, WELDING, SURFACE TREATMENT OF METALS. MANUFACTURING AND ASSEMBLY OF FIXTURES, EQUIPMENT, INSTRUMENTS AND TOOLS.

Original cycle start date:	**05.05.2009**
Expiry date of previous cycle:	**29.04.2024**
Recertification Audit date:	**26.04.2024**
Recertification cycle start date:	**29.04.2024**

Subject to the continued satisfactory operation of the organization's Management System, this certificate expires on: **28.04.2027**

Certificate No. ***SK-U24 054E*** *Version:* ***1*** *Issue date:* ***29.04.2024***

Certification body address: 5th Floor, 66 Prescot Street, London E1 8HG, United Kingdom
Local office: Plynárenská 7/B, BRATISLAVA 821 09, Slovak Republic

UKAS MANAGEMENT SYSTEMS 0008

Further clarifications regarding the scope and validity of this certificate and the applicability of the management system requirements, please call: + 421 2 5341 4165

1 / 1

METAL Trim

Company in 2025

People

Values – Strategy

Business development

Location

Services

Metaltrim 2028

Questions and answers

Quality department

Ensuring excellence through strong quality control measures.

2x 3D coordinate measuring machine WENZEL

CMM WENZEL LH 108
workspace dimensions - 2000x1000x800mm

CMM WENZEL LH 87
workspace dimensions 800x1500x700mm

Contourograph CV-2100M4, Mitutoyo

workspace dimensions
X = 100 mm
Y = 50 mm
Z = 350 mm

Environmental and economic sustainability

Company in 2024

People

Values – Strategy

Business development

Location

Services

Metaltrim 2027

Questions and answers

Metaltrim is part of ECOVADIS society

The EcoVadis sustainability assessment is a globally recognized, independent and fee-based service for evaluating the business practices and significant sustainability impacts of companies and supply chains.

<u>27.1.2025:</u>
Dun&Bradstreet certified of Metaltrim with high creditworthiness AAA.

The Metaltrim is part of highly exclusive group of companies in the Slovak Republic which have met the strictest economic evaluation criteria according to the Dun&Bradstreet.

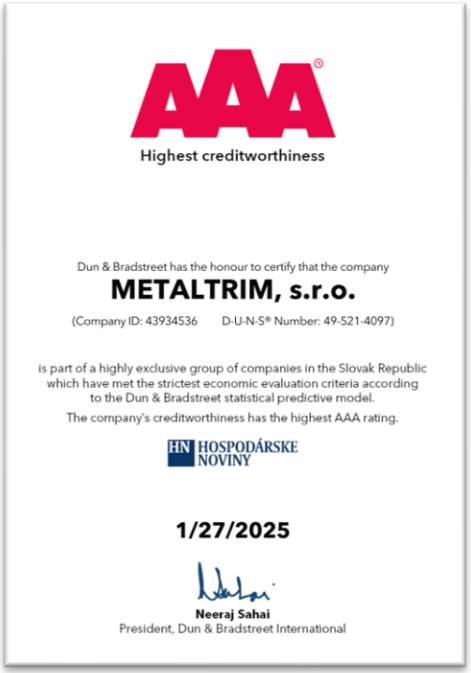
AAA
Highest creditworthiness

Dun & Bradstreet has the honour to certify that the company
METALTRIM, s.r.o.
(Company ID: 43934536 D-U-N-S® Number: 49-521-4097)

is part of a highly exclusive group of companies in the Slovak Republic which have met the strictest economic evaluation criteria according to the Dun & Bradstreet statistical predictive model.
The company's creditworthiness has the highest AAA rating.

HN HOSPODÁRSKE NOVINY

1/27/2025

Neeraj Sahai
President, Dun & Bradstreet International

METAL Trim

Company in 2025

People

Values – Strategy

Business development

Location

Services

Metaltrim 2028

Questions and answers

Technology

CNC Milling 10x

5axis Horizontal Machining center Makino a500z
5axis Milling center MAS MCU 700V
4axis Horizontal Machining center Makino a61nx
4axis Horizontal Machining center DOSAN NHP 6300
4axis Vertical machining center LEADWELL MCV 1300iS (2x)
4axis Vertical machining center VX 650
4axis Vertical machining center HYUNDAI WIA F500
4axis Vertical machining center DOOSAN DNM 500 II
4axis Vertical machining center CNC MAKINO L2

Tool Presetter
EZset 600

CNC Turning 8x

- vertical lathe with milling HYUNDAI KIA LV1100RM
- vertical lathe HYUNDAI KIA V80R
- vertical lathe DOSAN PUMA VT900
- vertical lathe HYUNDAI KIA V5R
- horizontal 2 spindle lathe with bar feeder DMG NZX 2000
- horizontal 2 spindel lathe with milling spindle DMG CLX 450 TC (2x)
- horizontal lathe DOOSAN Puma 2600Y
- horizontal lathe SKT 21 LM
- horizontal lathe SKT 28

Special technology

- Jager high performance spindle S62-M360.06 S5
- balancing machine CMT – 300 H2P

METAL Trim

Technology

Company in 2025

People

Values – Strategy

Business development

Location

Services

Metaltrim 2028

Questions and answers

CNC Milling

CNC 5axes Horizontal Machining center Makino a500z

XYZ-axis-travel 730x750x700

Workpiece size 630/500 mm; Maximum workpiece weight 400 kg

table clamping area size Ø 650mm; spindle stroke (z) 550mm number of axes 5; spindle speed 14000rpm; ISO 40 / BT 40

Technology

Company in 2025

People

Values – Strategy

Business development

Location

Services

Metaltrim 2028

Questions and answers

CNC Milling

CNC multifunctional 5-axis milling center
MAS MCU 700V-5X POWER control center
HEIDENHAIN MCU 700V-5XPOWER HH530
table clamping area size Ø 650mm; spindle stroke (z) 550mm number of axes 5; spindle speed 10000rpm; maximum workpiece weight 850kg

Technology

Company in 2025

People

Values – Strategy

Business development

Location

Services

Metaltrim 2028

Questions and answers

CNC Milling

CNC 4axes Horizontal Machining center Makino a61nx

FANUC Series table clamping area d800/h1000mm; Automatic pallet changer size 730x730x650mm; B axis 360°; Z-axis travel 800mm; number of axes 4; spindle speed 14000rpm; maximum workpiece weight 700kg

Company in 2025

People

Values – Strategy

Business development

Location

Services

Metaltrim 2028

Questions and answers

Technology

CNC Milling

CNC 4axes Horizontal milling center DOSAN NHP 6300

Control center Fanuc 31i-B - MD; max part D1050xH1350; Automatic pallet changer size 630x630 mm; XYZ-axis travel 1050x900x1000; number of axes 4; spindle speed 10000 rpm; maximum workpiece weight 1500kg

Company in 2025

People

Values – Strategy

Business development

Location

Services

Metaltrim 2028

Questions and answers

Technology

CNC Milling

CNC milling center LEADWELL MCV 1300iS

Control center Fanuc Series Oi - MD table; clamping area size 1500x610mm, (x) 1300mm, (y) 635mm spindle stroke (z) 610mm; number of axes 4; spindle speed 10000rpm; max. workpiece weight 1000kg

Company in 2025

People

Values – Strategy

Business development

Location

Services

Metaltrim 2028

Questions and answers

Technology

CNC Milling

CNC milling center VX 650 vertical machining center
control center FANUC Series 32i-MODEL A;
table clamping area size 1600x650mm; (x) 1400mm, (y) 660mm, spindle stroke (z) 520mm; number of axes 4; spindle speed 10000rpm; maximum workpiece weight 1200kg

Company in 2025

People

Values – Strategy

Business development

Location

Services

Metaltrim 2028

Questions and answers

Technology

CNC Milling

CNC milling center HYUNDAI WIA F500
control center FANUC Series 32i-MODEL A, table clamping area size 800x500mm; (x) 800mm, (y) 460mm , spindle stroke (z) 520mm;
number of axes 4; spindle speed 10000rpm; carrying capacity of machine 900kg

Company in 2025

People

Values – Strategy

Business development

Location

Services

Metaltrim 2028

Questions and answers

Technology

CNC Milling

CNC milling center DOOSAN DNM 500 II

Control center Doosan - Fanuc i Series,
table clamping area size 1200x540mm; (x) 1020mm, (y) 540mm, spindle stroke (z) 510mm; number of axes 4; spindle speed 10000rpm; max. workpiece weight 800kg

Company in 2025

People

Values – Strategy

Business development

Location

Services

Metaltrim 2028

Questions and answers

Technology

CNC Milling

CNC MAKINO 4 axis Vertical machining center L2
(x) 400 mm, (y) 300 mm , spindle stroke (z) 300 mm;
Number of axes 4; spindle speed 16000rpm;
Carrying capacity of machine 60 kg

Technology

Company in 2025

People

Values – Strategy

Business development

Location

Services

Metaltrim 2028

Questions and answers

CNC Turning – Vertical lathes

CNC vertical turning center HYUNDAI KIA V80R
maximum diameter Ø880mm;
maximum length 750mm; spindle speed 2000rpm

CNC vertical turning center HYUNDAI KIA V5R
maximum diameter Ø550mm; maximum length 750mm

CNC vertical lathe with milling HYUNDAI KIA LV1100RM
Control system FANUC 32i-A; maximum diameter Ø1160mm; maximum length 1000mm; spindle speed 800rpm

CNC vertical turning center DOSAN PUMA VT900
max. diameter Ø900 mm,
max. height of part 900 mm,
max. spindle rev.1800 rpm

Company in 2025

People

Values – Strategy

Business development

Location

Services

Metaltrim 2028

Questions and answers

Technology

CNC Turning – Horizontal lathes

CNC 2 spindel lathe with milling spinde DMG CLX 450 TC (2x)
maximum diameter Ø400mm;
maximum length 1100 mm

CNC 2 spindle lathe with bar feeder DMG NZX 2000
maximum diameter Ø320mm;
maximum length 1130 mm

CNC horizontal lathe DOOSAN Puma 2600Y
maximum diameter Ø300mm;
maximum length 800mm

CNC horizontal lathe SKT 28
maximum diameter Ø300mm;
maximum length 800mm

CNC horizontal lathe SKT 21 LM
maximum diameter Ø120mm;
maximum length 800mm

Technology

Company in 2025

People

Values – Strategy

Business development

Location

Services

Metaltrim 2028

Questions and answers

CNC Balancing

CNC balancing machine CMT – 300 H2P
maximum diameter Ø1600mm; maximum length 2500mm; maximum load 300kg; accuracy ISO 21940

Company in 2025

People

Values – Strategy

Business development

Location

Services

Metaltrim 2028

Questions and answers

Technology

CLASSIC MACHINES

Milling machine FGSV 50

Drilling machine VS 32

Coordinate drilling machine BKOE 400

Drilling machine V 050

Lathe SUI 50

Shaping machine 7403

Grinder BR 2ud 500

Company in 2025

People

Values – Strategy

Business development

Location

Services

Metaltrim 2028

Questions and answers

Technology

Investment 2026

CNC 2 spindel lathe with automation feeder CT3-76Y2M
maximum diameter Ø360mm;
maximum length 285 mm

Company in 2025

People

Values – Strategy

Business development

Location

Services

Metaltrim 2028

Questions and answers

Technology

SAWS and others

CNC circular saw P-100B
Ø15-100mm

Column Type H-460HBFully Automatic Band Saw
460x460mm

The band saw machine ergonomic 290.250 GAE

Tapping machine ET 500

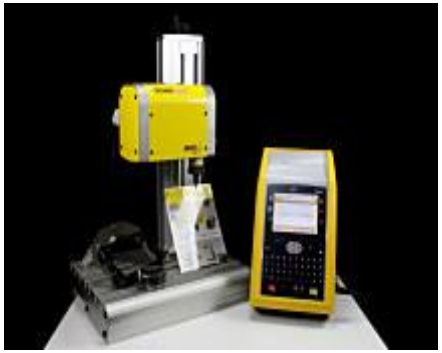

Engraving machine Technomark Multi 4

Technology

Company in 2025

People

Values – Strategy

Business development

Location

Services

Metaltrim 2028

Questions and answers

PAINTING
Small series, prototyping

Wet painting technology

Phosphate pre-treatment
Small series, prototypes

Aplication devices
Wagner M3 1477
Kremlin Rexson EOS

Company in 2025

People

Values – Strategy

Business development

Location

Services

Metaltrim 2028

Questions and answers

VISION

Strategic initiatives	2028 Targets

- **People growth**
  - Sharing experiences
  - Training and coaching – difficult parts
- **Portfolio**
  - Build 4 strong segments %30 - 30 – 25 – 15
- **Productivity**
  - Focus on setup processes
  - People motivation
  - ERP system improvement (reporting)
- **Enviroment and sustainability**
  - the allocation of time resources for the development of the required regulations
  - setting up regular reports

€8 M Sales in 2028

70 employees

Segment dividing 30-30-25-15

EcoVadis Silver

Company in 2025

People

Values – Strategy

Business development

Location

Services

Metaltrim 2028

Questions and answers

Questions and answers

Thank you for attention